NORTH STAR™
WATER TREATMENT SYSTEMS

Installation and Operation Manual

Models
NSC22 & NSC31

How to install, operate and maintain your Demand Controlled Water Softener

If you have any questions or concerns when installing, operating or maintaining your water softener, contact us at:

info@northstarwater.com

or visit **www.northstarwater.com**

Systems tested and certified by NSF International against NSF/ANSI Standard 44 for hardness reduction and efficiency, and certified to NSF/ANSI Standard 372.

Systems tested and certified by the Water Quality Association against CSA B483.1.

Designed, Engineered & Assembled in the U.S.A.

Manufactured and warranted by
North Star Water Treatment Systems
1890 Woodlane Drive
Woodbury, MN 55125

7371119 (Rev. A 6/11/18)

TABLE OF CONTENTS

	Page
Specifications & Performance Claims	3
Dimensions	4
Before You Start	4
Inspect Shipment	5
Water Conditioning Information	5
Installation Requirements	6-7
Installation Instructions	8-11
Programming the Water Softener	12-13
Controller Features	14-17
Routine Maintenance	18-19
Troubleshooting	20-22
Wiring Schematic	23
Exploded View & Parts List	24-27

WATER SOFTENER WARRANTY

Warrantor: North Star Water Treatment Systems, 1890 Woodlane Drive, Woodbury, MN 55125

Warrantor guarantees, to the original owner, that:

One Year Full Warranty:

- For a period of one (1) year from the date of purchase, all parts will be free from defects in materials and workmanship and will perform their normal functions.

Limited Warranties:

- For a period of ten (10) years from the date of purchase, the salt storage tank and fiberglass mineral tank will not rust, corrode, leak, burst, or in any other manner, fail to perform their proper functions.
- For a period of three (3) years from the date of purchase, the electronic control board and valve body will be free of defects in materials and workmanship and will perform their normal functions.

If, during such respective period, a part proves to be defective, Warrantor will ship a replacement part directly to your home, without charge.

General Provisions

Damage to any part of this water softener because of misuse, misapplication, neglect, alteration, accident, installation or operation contrary to our printed instructions, or damage caused by any unusual force of nature such as, but not limited to, freezing, flood, hurricane, tornado, or earthquake is not covered by this warranty. In all such cases, regular parts and service charges will apply.

We assume no warranty liability in connection with this water softener other than specified herein. This warranty is in lieu of all other warranties, expressed or implied, including warranties of fitness for a particular purpose. We do not authorize any person or representative to assume for us any other obligations on the sale of this water softener.

Should a defect or malfunction occur, contact your contractor. If you are unable to contact your contractor, return the part, freight prepaid, directly to the factory at the address below. Enclose with the part a full description of the problem, with your name, full address, date purchased, model and serial numbers, and selling contractor's name and address. We will repair or replace the part and return it to you at no cost if our repair department determines it to be defective under the terms of the warranty.

This warranty gives you specific legal rights and you may have other rights which vary from state to state.

This water softener is manufactured by
North Star Water Treatment Systems, 1890 Woodlane Drive, Woodbury, MN 55125

Questions? Contact us at: info@northstarwater.com

Specifications & Performance Claims

These models are efficiency rated. The efficiency rating is valid only at the minimum salt dose. These softeners have a demand initiated regeneration (D.I.R.) feature that complies with specific performance specifications intended to minimize the amount of regenerant brine and water used in their operation.

These softeners have a rated softener efficiency of not less than 3,350 grains of total hardness exchange per pound of salt (based on sodium chloride) and shall not deliver more salt than their listed rating or be operated at a sustained maximum service flow rate greater than their listed rating. These softeners have been proven to deliver soft water for at least ten continuous minutes at the rated service flow rate. The rated salt efficiency is measured by laboratory tests described in NSF/ANSI Standard 44. These tests represent the maximum possible efficiency that the system can achieve. Operational efficiency is the actual efficiency after the system has been installed. It is typically less than the rated efficiency, due to individual application factors including water hardness, water usage, and other contaminants that reduce a softener's capacity.

	Model NSC22	**Model NSC31**
Model Code	nS22	nS31
Rated Softening Capacity (Grains @ Salt Dose)	8,700 @ 1.9 lbs. 18,500 @ 6.2 lbs. 22,100 @ 10.4 lbs.	12,300 @ 2.4 lbs. 26,200 @ 7.7 lbs. 31,300 @ 12.9 lbs.
Rated Efficiency (Grains/Pound of Salt @ Minimum Salt Dose)	4,474 @ 1.9 lbs.	5,090 @ 2.4 lbs.
Water Used During Regeneration @ Minimum Salt Dose	3.0 gal. / 1,000 grains	2.5 gal. / 1,000 grains
Total Water Used Per Regeneration @ Maximum Salt Dose	30.4 gallons	31.1 gallons
Rated Service Flow Rate	7.2 gpm	7.2 gpm
Amount of High Capacity Ion Exchange Resin	0.65 cu. ft.	0.81 cu. ft.
Pressure Drop at Rated Service Flow	13.7 psig	14.9 psig
Intermittent Flow Rate @ 15 psi*	7.6 gpm	7.3 gpm
Water Supply Max. Hardness	95 gpg	110 gpg
Water Supply Max. Clear Water Iron	6 ppm**	8 ppm**
Water Supply Pressure Limits (minimum / maximum)	20 - 125 psi (138 - 862 kPa)***	
Water Temperature Limits (minimum / maximum)	40 - 120 °F (5 - 49 °C)	
Minimum Water Supply Flow Rate	3 gpm (11.4 lpm)	
Maximum Drain Flow Rate	2.0 gpm (7.6 lpm)	

*Intermittent flow rate does not represent the maximum service flow rate used for determining the softeners' rated capacity and efficiency. Continuous operation at flow rates greater than the service flow rate may affect capacity and efficiency performance.

**Capacity to reduce clear water iron is substantiated by laboratory test data. State of Wisconsin requires additional treatment if water supply contains clear water iron exceeding 5 ppm.

***Canada working pressure limits: 1.4 - 7.0 kg/cm^2.

These systems conform to NSF/ANSI 44 for the specific performance claims as verified and substantiated by test data.

Variable Salt Dose: The salt dose is selected by the electronic controls at regeneration time based on the amount needed.

Questions? Contact us at: **info@northstarwater.com** or visit **www.northstarwater.com**

Dimensions

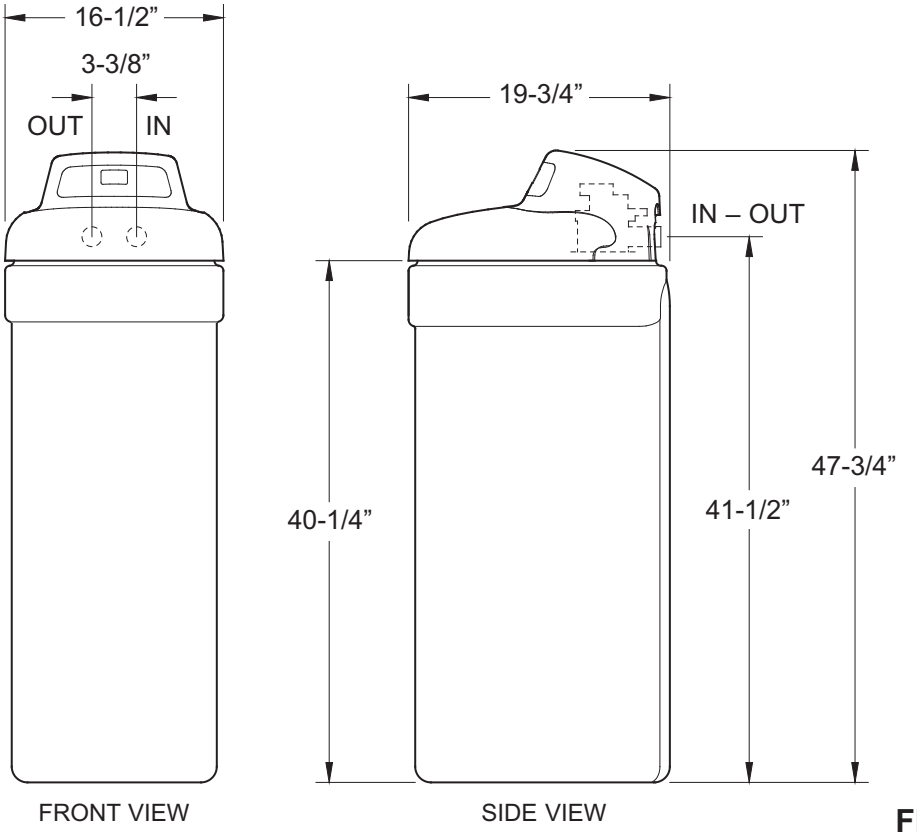

FIG. 1

Before You Start

- The water softener requires a minimum water flow of 3 gallons per minute at the inlet. Maximum allowable inlet water pressure is 125 psi. If daytime pressure is over 80 psi, nighttime pressure may exceed the maximum. Use a pressure reducing valve if necessary (Adding a pressure reducing valve may reduce the flow). If your home is equipped with a back flow preventer, an expansion tank must be installed in accordance with local codes and laws.
- The water softener works on 24V DC electrical power, supplied by a direct plug-in power supply (included). Be sure to use the included power supply and plug it into a nominal 120V, 60 Hz household outlet that is in a dry location only, grounded and properly protected by an overcurrent device such as a circuit breaker or fuse.
- Do not use this system to treat water that is microbiologically unsafe or of unknown quality without adequate disinfection upstream or downstream of the system.

European Directive 2002/96/EC requires all electrical and electronic equipment to be disposed of according to Waste Electrical and Electronic Equipment (WEEE) requirements. This directive or similar laws are in place nationally and can vary from region to region. Please refer to your state and local laws for proper disposal of this equipment.

Inspect Shipment

The parts required to assemble and install the water softener are included with the unit. Thoroughly check the water softener for possible shipping damage and parts loss. Also inspect and note any damage to the shipping carton.

Remove and discard (or recycle) all packing materials. To avoid loss of small parts, we suggest you keep the small parts in the parts bag until you are ready to use them.

Packing List

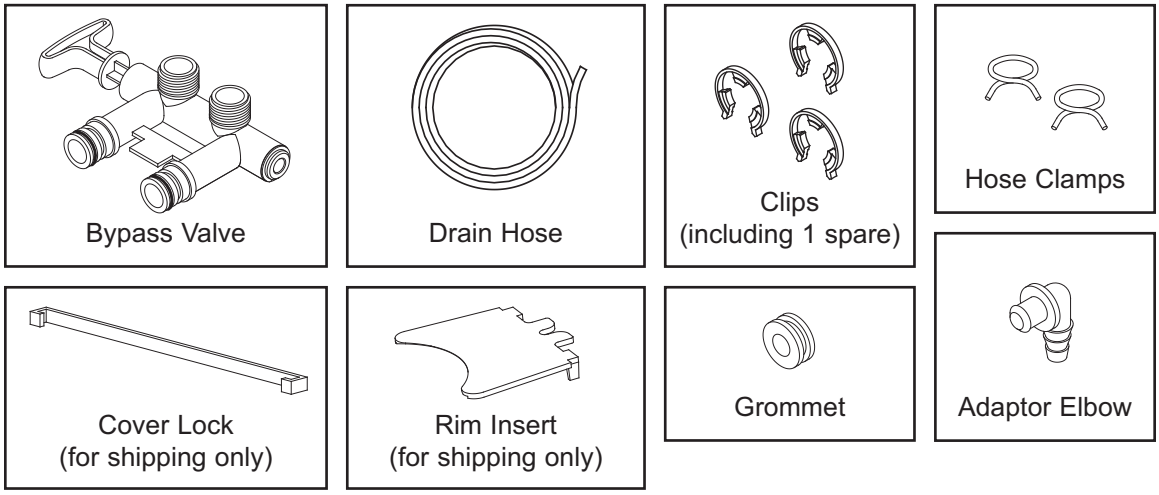

FIG. 2

Water Conditioning Information

IRON

Iron in water can cause stains on clothing and plumbing fixtures. It can negatively affect the taste of food, drinking water, and other beverages. Iron in water is measured in parts per million (ppm). The total* ppm of iron, and type or types*, is determined by chemical analysis. Four different types of iron in water are:

- Ferrous (clear water) iron
- Ferric (red water) iron
- Bacterial and organically bound iron
- Colloidal and inorganically bound iron (ferrous or ferric)

Ferrous (clear water) iron is soluble and dissolves in water. This water softener will reduce moderate amounts of this type of iron (see specifications).** Ferrous (clear water) iron is usually detected by taking a sample of water in a clear bottle or glass. Immediately after taking, the sample is clear. As the water sample stands, it gradually clouds and turns slightly yellow or brown as air oxidizes the iron. This usually occurs in 15 to 30 minutes.

When using the softener to reduce Ferrous (clear water) iron, add 5 grains to the hardness setting for every 1 ppm of Ferrous (clear water) iron. See "Set Water Hardness Number" section.

Ferric (red water), and bacterial and organically bound irons are insoluble. This water softener will not remove ferric or bacterial iron. This iron is visible immediately when drawn from a faucet because it has oxidized before reaching the home. It appears as small cloudy yellow, orange, or reddish suspended particles. After the water stands for a period of time, the particles settle to the bottom of the container. Generally these irons are removed from water by filtration. Chlorination is also recommended for bacterial iron.

Colloidal and inorganically bound iron is of ferric or ferrous form that will not filter or exchange out of water. This water softener will not remove colloidal iron. In some instances, treatment may improve colloidal iron water. Colloidal iron water usually has a yellow appearance when drawn. After standing for several hours, the color persists and the iron does not settle, but remains suspended in the water.

SEDIMENT

Sediment is fine, foreign material particles suspended in water. This water softener will not remove sediment. This material is most often clay or silt. Extreme amounts of sediment may give the water a cloudy appearance. A sediment filter installed upstream of the water softener normally corrects this situation.

* Water may contain one or more of the four types of iron and any combination of these. Total iron is the sum of the contents.

** Capacity to reduce clear water iron is substantiated by laboratory test data.

Installation Requirements

LOCATION REQUIREMENTS

Consider all of the following when selecting an installation location for the water softener.

- Do not locate the water softener where freezing temperatures occur. Do not attempt to treat water over 120ºF. Freezing temperatures or hot water damage voids the warranty.
- To condition all water in the home, install the water softener close to the water supply inlet, and upstream of all other plumbing connections, except outside water pipes. Outside faucets should remain on hard water to avoid wasting conditioned water and salt.
- A nearby drain is needed to carry away regeneration discharge (drain) water. Use a floor drain, laundry tub, sump, standpipe, or other options (check your local codes). See "Air Gap Requirements" and "Valve Drain Requirements" sections.
- The water softener works on 24V DC electrical power, supplied by a direct plug-in power supply (included). Provide nearby a 120V, 60 Hz electrical outlet in accordance with NEC and local codes.
- Always install the water softener between the water inlet and water heater. Any other installed water conditioning equipment should be installed between the water inlet and water softener (See Figure 4 below).
- Avoid installing in direct sunlight. Excessive sun heat may cause distortion or other damage to non-metallic parts.

PLUMBING CODES

All plumbing must be completed in accordance with national, state and local plumbing codes.

> In the state of Massachusetts: The Commonwealth of Massachusetts plumbing code 248-CMR shall be adhered to. A licensed plumber shall be used for this installation.

AIR GAP REQUIREMENTS

A drain is needed for regeneration water (See Figure 3). A floor drain, close to the water softener, is preferred. A laundry tub, standpipe, etc. are other drain options. Secure valve drain hose in place. Leave an air gap of 1-1/2” between the end of the hose and the drain. This gap is needed to prevent backflow of sewer water into the water softener. Do not put the end of the drain hose into the drain.

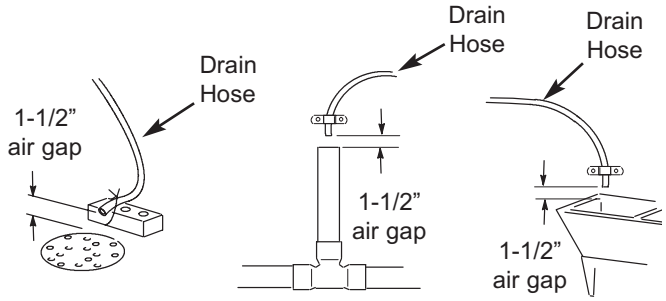

FIG. 3

THE PROPER ORDER TO INSTALL WATER TREATMENT EQUIPMENT

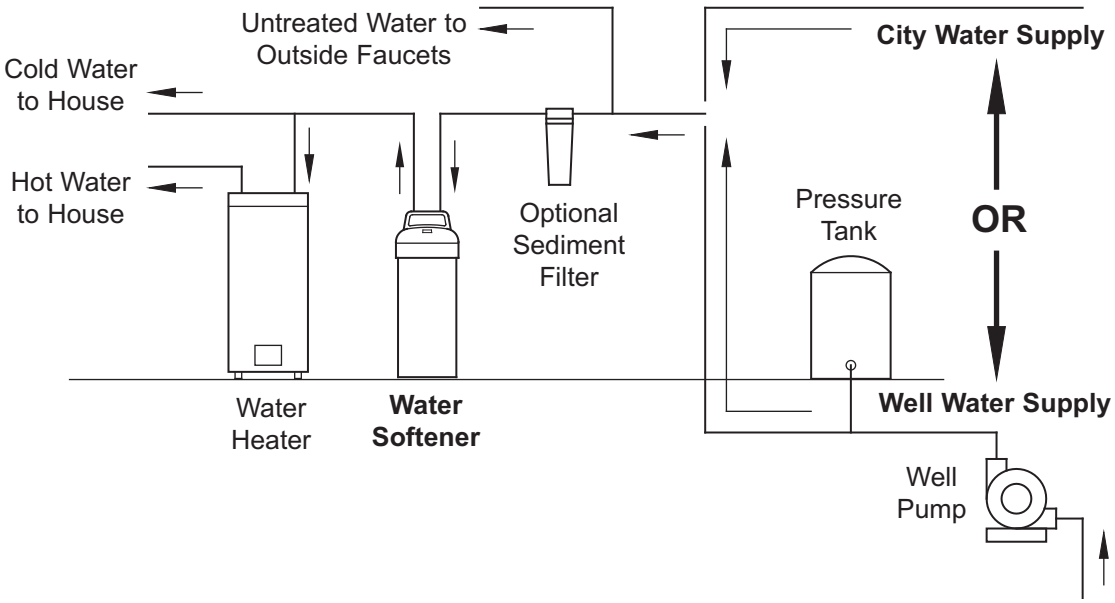

FIG. 4

Installation Requirements

VALVE DRAIN REQUIREMENTS

Using the flexible drain hose (included), measure and cut to the length needed. Flexible drain hose is not allowed in all localities (check your plumbing codes). If local codes do not allow use of a flexible drain hose, a rigid valve drain run must be used. Purchase a compression fitting (1/4 NPT x 1/2 in. minimum tube) and 1/2" tubing from your local hardware store. Plumb a rigid drain as needed (See Figure 6).

NOTE: Avoid drain hose runs longer than 30 feet. Avoid elevating the hose more than 8 feet above the floor. Make the valve drain line as short and direct as possible.

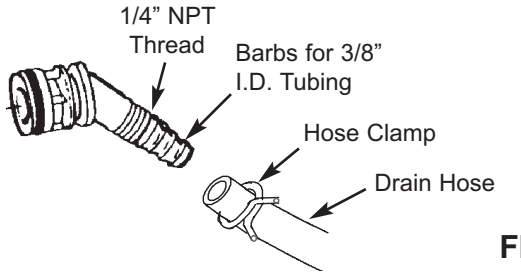

FIG. 5

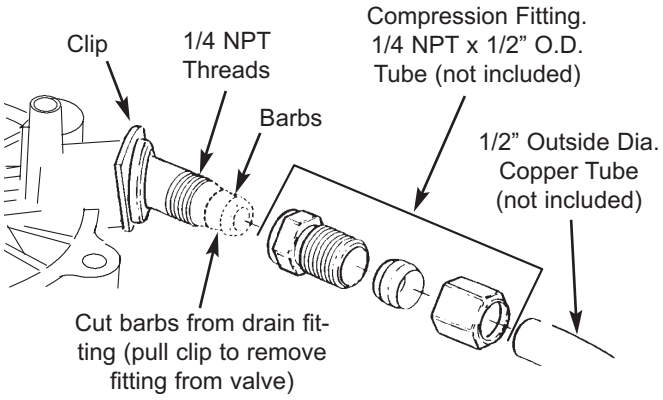

FIG. 6

INLET / OUTLET PLUMBING OPTIONS

Always install either a single bypass valve (provided), as shown in Figure 7, or, if desired, parts for a 3 valve bypass system (not included) can be purchased and assembled, as shown in Figure 8. Bypass valves allow you to turn off water to the softener for maintenance if needed, but still have water in house pipes.

Use:

- Copper pipe
- Threaded pipe
- PEX (Crosslinked Polyethylene) pipe
- CPVC plastic pipe
- Other pipe approved for use with potable water

IMPORTANT: Do not solder with plumbing attached to the single bypass valve. Soldering heat will damage the plastic valve.

SINGLE BYPASS VALVE

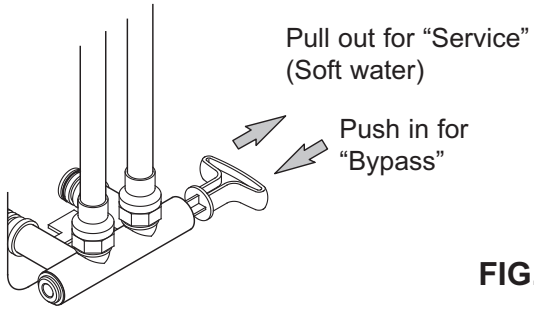

FIG. 7

3 VALVE BYPASS

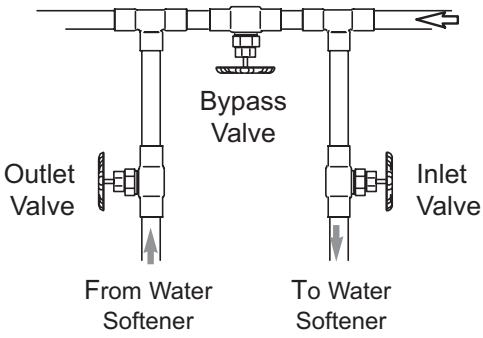

FIG. 8

Installation Instructions

TYPICAL INSTALLATION

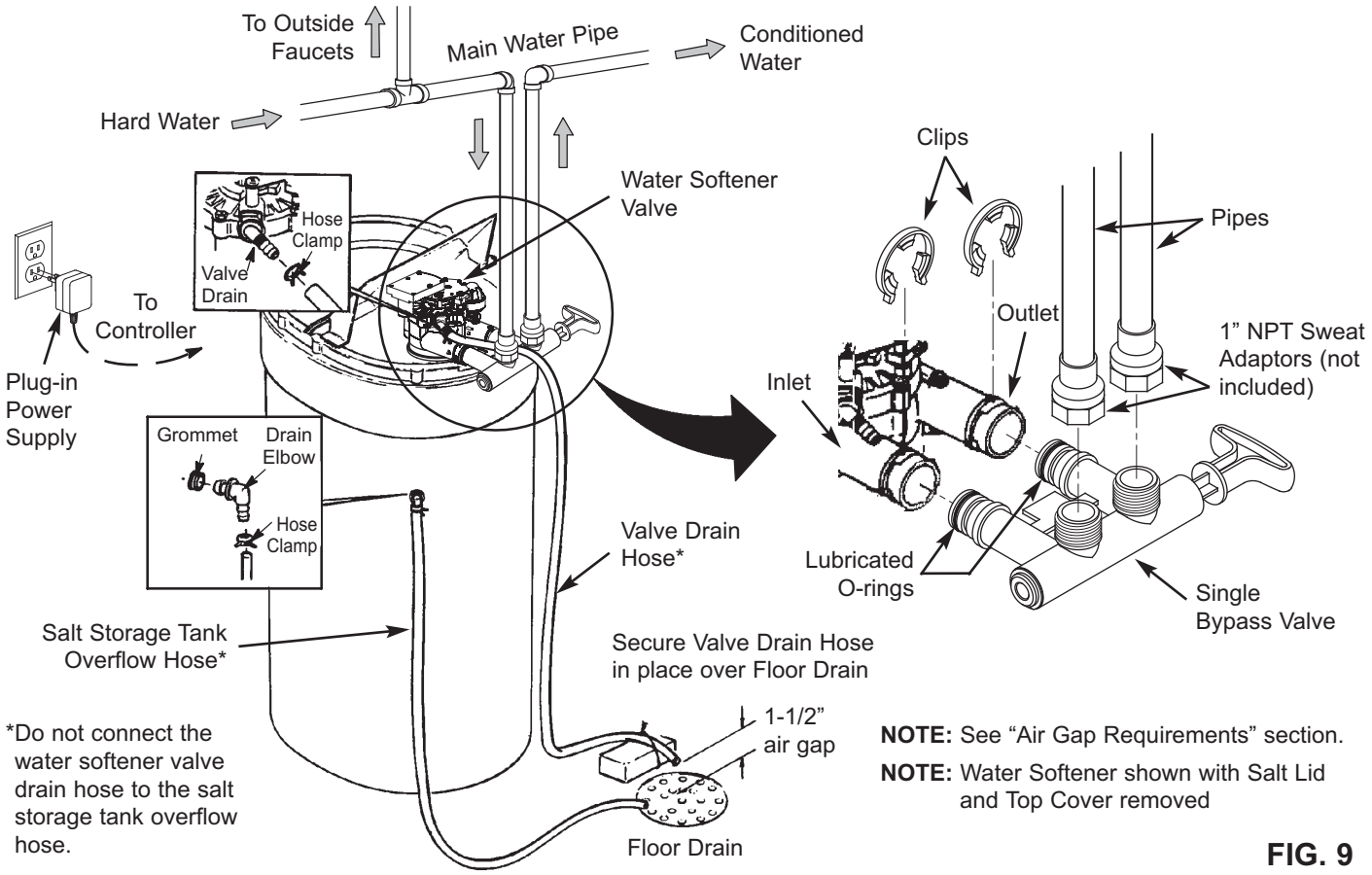

FIG. 9

TURN OFF WATER SUPPLY

1. Close the main water supply valve, located near the well pump or water meter.

2. Shut off the electric or fuel supply to the water heater.

3. Open all faucets to drain all water from house pipes.

NOTE: Be sure not to drain water from the water heater, as damage to the water heater elements could result.

ASSEMBLY

1. North Star models are factory assembled. During installation, unsnap and remove the top cover, together with the salt lid, to expose the softener valve assembly. Set them aside to prevent damage. Check the brinewell to be sure it is secured and vertical (See Figure 11).

2. Install the brine tank overflow grommet and elbow into the 13/16" diameter hole in the back of the salt storage tank wall.

MOVE THE UNIT INTO PLACE

1. Move the water softener into the desired location. Set it on a solid, level surface.

IMPORTANT: Do not place shims directly under the salt storage tank to level the softener. The weight of the tank, when full of water and salt, may cause the tank to fracture at the shim.

2. Visually check and remove any debris from the water softener valve inlet and outlet ports.

3. Make sure the turbine assembly spins freely in the "out" port of the valve (See Figure 10).

4. If not already done, put a light coating of silicone grease on the single bypass valve o-rings.

5. Push the single bypass valve into the softener valve as far as it will go. Snap the two large holding clips into place, from the top down as shown in Figures 12 & 13.

IMPORTANT: Be sure the clips snap firmly into place so the single bypass valve will not pull out.

COMPLETE INLET AND OUTLET PLUMBING

Measure, cut, and loosely assemble pipe and fittings from the main water pipe to the inlet and outlet ports of the water softener valve. Be sure to keep fittings fully together, and pipes squared and straight.

Be sure hard water supply pipe goes to the water softener valve inlet side.

NOTE: Inlet and outlet are marked on the water softener valve. Trace the water flow direction to be sure hard water is to inlet.

IMPORTANT: Be sure to fit, align and support all plumbing to prevent putting stress on the water softener valve inlet and outlet. Undue stress from misaligned or unsupported plumbing may cause damage to the valve.

Complete the inlet and outlet plumbing for the type of pipes you will be using.

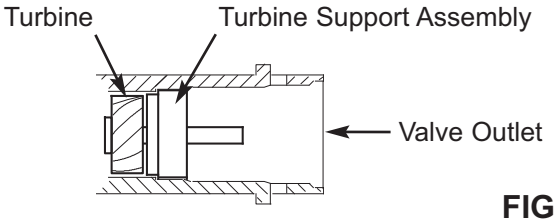

FIG. 10

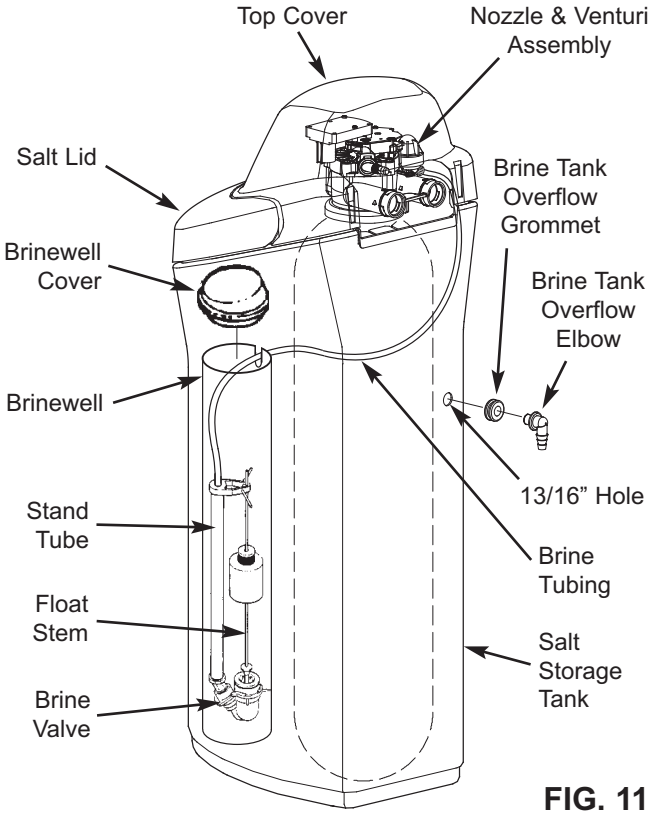

FIG. 11

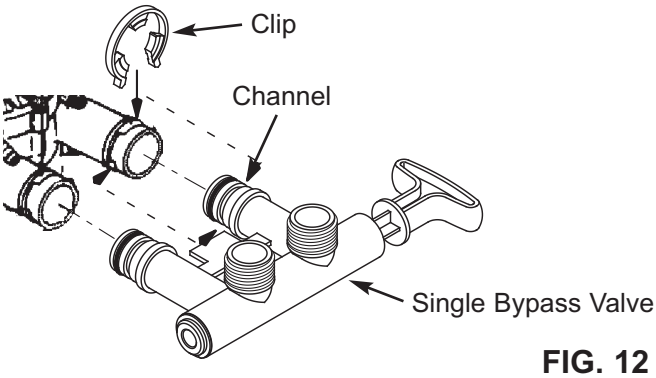

FIG. 12

Correct Assembly

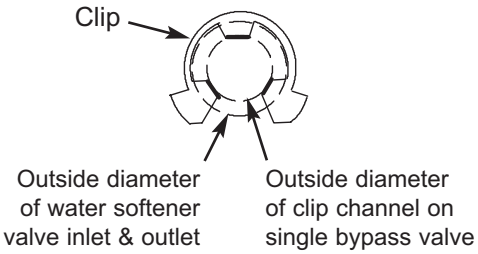

FIG. 13

NOTE: Be sure all 3 tabs of the clip go through the matching holes on the water softener valve inlet or outlet, and fully into the channel on the single bypass valve. Make sure that the tabs are fully seated.

Installation Instructions

COLD WATER PIPE GROUNDING

CAUTION: The house cold water pipe (metal only) is often used as a ground for the house electrical system, The 3-valve bypass type of installation, shown in Figure 8, will maintain ground continuity. If you use a plastic bypass valve at the unit, continuity is broken. To restore the ground, do the following:

1. Install a #4 copper wire across the removed section of main water pipe, securely clamping it at both ends (See Figure 14) - parts not included.

NOTE: Check local plumbing and electrical codes for proper installation of the ground wire. The installation must conform to them. In Massachusetts, plumbing codes of Massachusetts shall be conformed to. Consult with your licensed plumber.

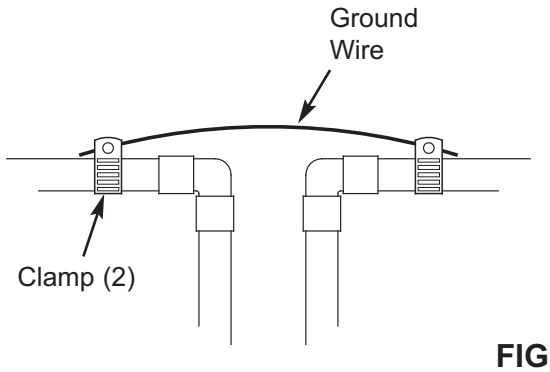

FIG. 14

INSTALL VALVE DRAIN HOSE

NOTE: See valve drain options on pages 6 & 7.

1. Measure, cut to needed length and connect the 3/8" drain line (provided) to the water softener valve drain fitting. Use a hose clamp to hold the hose in place.

IMPORTANT: If codes require a rigid drain line see "Valve Drain requirements" section.

2. Run the drain hose (or a rigid line) to the floor drain. Secure drain hose. This will prevent "whipping" during regenerations. **Be sure to provide a 1-1/2" minimum air gap to prevent possible sewer water backup.** See "Air Gap Requirements" section.

NOTE: In addition to a floor drain, you can use a laundry tub or standpipe as a drain point for this hose. Avoid long drain hose runs, or elevating the hose more than 8 feet above the floor.

INSTALL SALT STORAGE TANK OVERFLOW HOSE

1. Measure, cut to needed length and connect the 3/8" drain line (provided) to the salt storage tank overflow elbow and secure in place with a hose clamp.

2. Route the hose to the floor drain, or other suitable drain point no higher than the drain fitting on the salt storage tank (This is a gravity drain). If the tank overfills with water, the excess water flows to the drain point. Cut the drain line to the desired length and route it neatly out of the way.

IMPORTANT: For proper operation of the water softener, do not connect the water softener valve drain tubing to the salt storage tank overflow hose.

TEST FOR LEAKS

To prevent air pressure in the water softener and plumbing system, complete the following steps in order:

1. Fully open two or more softened cold water faucets close to the water softener, located downstream from the water softener.

2. Place the bypass valve (single or 3 valve) into the "bypass" position. See Figures 7 & 8 on Page 7.

3. Slowly open the main water supply valve. Run water until there is a steady flow from the opened faucets, with no air bubbles.

4. Place bypass valve(s) in "service" or soft water position as follows:

- Single bypass valve: Slowly move the valve stem toward "service," pausing several times to allow the water softener to fill with water.
- 3 valve bypass: Fully close the bypass valve and open the outlet valve. Slowly open the inlet valve, pausing several times to allow the water softener to fill with water.

5. After about three minutes, open a hot water faucet until there is a steady flow and there are no air bubbles, then close this faucet.

6. Close all cold water faucets and check for leaks at the plumbing connections that you made.

7. Check for leaks around clips at softener's inlet and outlet. If a leak occurs at a clip, depressurize the plumbing (turn off the water supply and open faucets) before removing clip. When removing clips at the softener's inlet or outlet, push the single bypass valve body toward the softener (See Figure 15). Improper removal may damage clips. Do not reinstall damaged clips.

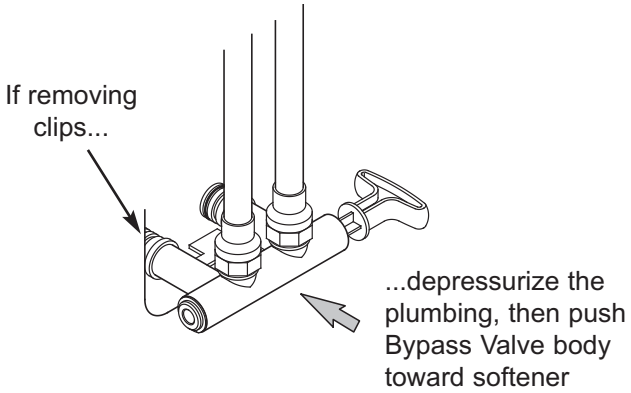

FIG. 15

ADD WATER AND SALT TO THE SALT STORAGE TANK

1. Using a container, add about three gallons of clean water into the salt storage tank.

2. Add salt to the storage tank. Use nugget, pellet or coarse solar salts with less than 1% impurities.

PLUG IN THE POWER SUPPLY

During installation, the water softener wiring may be moved or jostled from place. Check to be sure all leadwire connectors are secure on the back of the electronic board and be sure all wiring is away from the valve gear and motor area, which rotates during regenerations.

1. Plug the water softener's power supply into an electrical outlet that is not controlled by a switch and is approved by local codes.

NOTE: The water heater is filled with hard water and, as hot water is used, it will refill with conditioned water. In a few days, the hot water will be fully conditioned. To have fully conditioned hot water immediately, wait until the initial recharge is over. Then, drain the water heater (following instructions for water heater) until water runs cold.

PROGRAM THE CONTROLLER

1. Install the softener's top cover and salt lid.

2. Complete the Programming Steps on Pages 12 & 13.

SANITIZE THE WATER SOFTENER / SANITIZE AFTER SERVICE

Care is taken at the factory to keep your unit clean and sanitary. Materials used to make the unit will not infect or contaminate your water supply, and will not cause bacteria to form or grow. However, during shipping, storage, installation and operation, bacteria could get into the unit. For this reason, sanitizing as follows is suggested* when installing.

1. Slide open the salt lid, remove the brinewell cover and pour about 3 oz. (6 tablespoons) of household bleach into the softener brinewell. Replace the brinewell cover.

2 Make sure the bypass valve(s) is in the "service" (open) position.

3 Start a recharge: Press the RECHARGE button <u>and hold for 3 seconds</u>, until "Recharge Now" begins to flash in the display. This recharge draws the sanitizing bleach into and through the water softener. Any air remaining in the unit is purged to the drain.

4. After the recharge has completed, fully open a cold water faucet, downstream from the softener, and allow 50 gallons of water to pass through the system. This should take at least 20 minutes. Close the faucet.

*Recommended by the Water Quality Association. On some water supplies, the unit may need periodic disinfecting.

RESTART THE WATER HEATER

1. Turn on the electricity or fuel supply to the water heater and relight the pilot, if applicable.

NOTE: The water heater is filled with hard water and, as hot water is used, it refills with conditioned water. In a few days, the hot water will be fully conditioned. To have fully conditioned hot water immediately, wait until the initial recharge (previous step) is over. Then, drain the water heater (following instructions for water heater) until water runs cold.

Programming the Water Softener

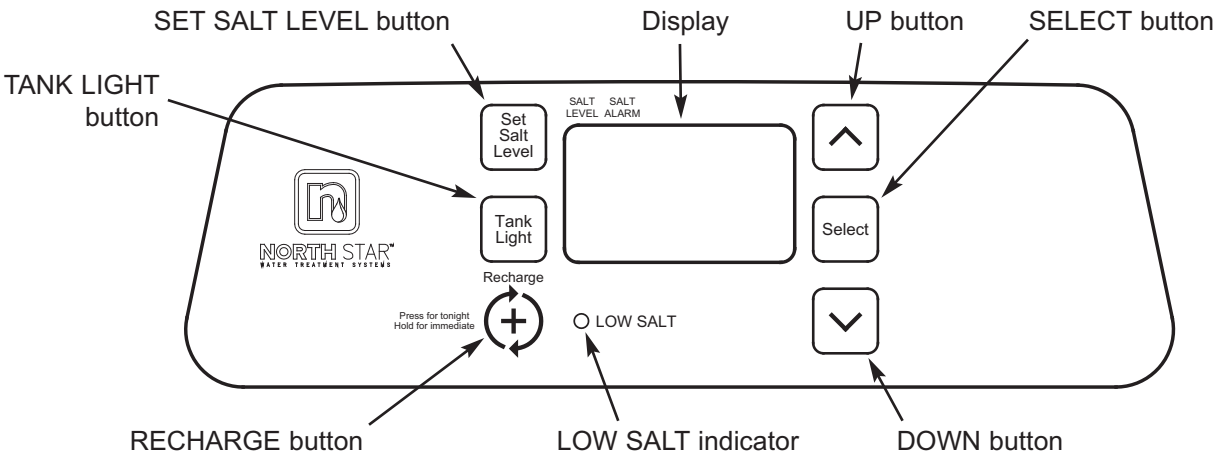

FIG. 16

PROGRAM THE SOFTENER

When the power supply is plugged into the electrical outlet, the model code (nS22 or nS31) and a software version number (example: J3.9), are briefly shown in the display. Then the words “PRESENT TIME” appear and 12:00 begins to flash.

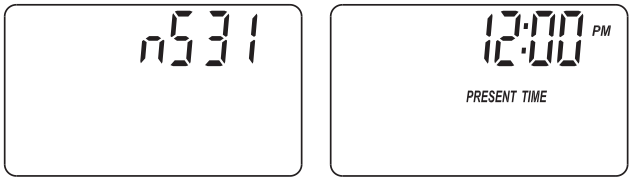

FIG. 17

SET PRESENT TIME OF DAY

If the words “PRESENT TIME" do not show in the display, press the SELECT button a few times until they do.

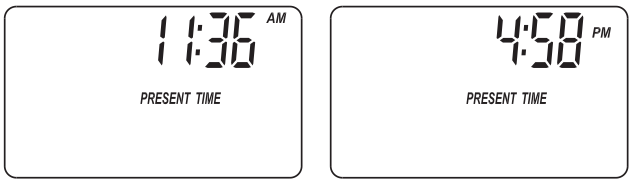

FIG. 18

1. Press the △ UP or ▽ DOWN buttons to set the present time. Up moves the display ahead; down sets the time back.

NOTE: Press buttons and quickly release to slowly advance the display. Hold the buttons down for fast advance.

2. When the correct time is displayed, press the SELECT button, and the display will change to show the “Hardness” screen.

continued on next page

Programming the Water Softener

SET WATER HARDNESS NUMBER

If you completed the previous step, the word “HARDNESS" should show in the display. Otherwise, press the SELECT button several times until it does.

FIG. 19

1. Press the △ UP or ▽ DOWN buttons to set the hardness of your water supply, in grains per gallon. The default is 25.

NOTE: If your water supply contains iron, compensate for it by adding to the water hardness number. For example, assume your water is 20 gpg hard and contains 2 ppm iron. Add 5 to the hardness number for each 1 ppm of iron. In this example, you would use 30 for your hardness number.

	20 gpg hardness
2 ppm iron x 5 = 10	+10
(times)	30 HARDNESS NUMBER

2. When finished setting your water’s hardness number, press the SELECT button, and the display will change to show the “Recharge Time” screen.

SET RECHARGE (REGENERATION) START TIME

If you completed the previous step, the words “RECHARGE TIME" should show in the display. Otherwise, press the SELECT button several times until they do.

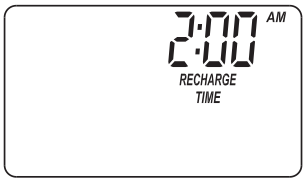

FIG. 20

1. The softener’s default recharge start time is 2:00 AM. This is normally a time of day when water is not being used in the household. Hard water bypasses the softener if the household draws water during the recharge cycle. If a different recharge start time is desired, press the △ UP or ▽ DOWN buttons to change the time, in 1-hour increments. Be sure AM or PM is correct.

2. When the desired recharge start time is displayed, press the SELECT button, and the display will return to the normal run (time of day) screen.

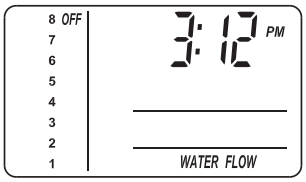

FIG. 21

Controller Features

EXTRA RECHARGE

Sometimes, a manually initiated recharge (regeneration) may be desired, or needed. Two examples are:

- You have used more water than usual (guests visiting) and you may run out of soft water before the next automatic regeneration.
- You did not add salt to the softener before it ran out. Add salt to the softener before regenerating.

You can start a regeneration immediately, or you can set the controller to regenerate at the next preset recharge time (2:00 AM, or as set).

RECHARGE NOW

Press the RECHARGE button and hold for 3 seconds, until the words “RECHARGE”, “Serv” and “Fill” begin to flash in the display. The softener enters the fill cycle of regeneration immediately. This regeneration will take about 2 hours to complete. Then, you will have soft water again.

NOTE: If the “Clean Feature” is set ON, the normal regeneration cycle is preceded by a cleaning backwash and rinse. The words “CLEAN” and “Bkwsh” or “Rinse” flash in the display, along with the minutes of the clean cycle remaining.

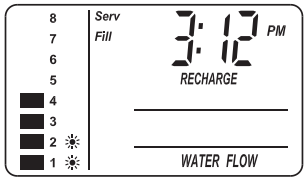

FIG. 22

RECHARGE TONIGHT

Press and release (do not hold) the RECHARGE button. “RECHARGE TONIGHT” will begin flashing in the display, and the softener will begin regeneration at the next preset recharge time (2:00 AM, or as set). If you decide to cancel the regeneration before it starts, press and release the RECHARGE button once more. “RECHARGE TONIGHT” will stop flashing in the display.

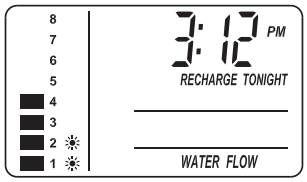

FIG. 23

SALT MONITOR SYSTEM

The water softener has a salt monitor indicator light to remind you to add salt to the storage tank.

NOTE: You must set salt level each time salt is added to the water softener.

NOTE: The salt monitor system estimates salt levels, and accuracy will vary with different salts.

To set this monitor system:

1. Lift the salt lid and level the salt in the storage tank.
2. The salt level scale, on the brinewell inside the tank, has numbers from 0 to 8 (see Fig. 24). Observe the highest number the leveled salt is at, or closest to.

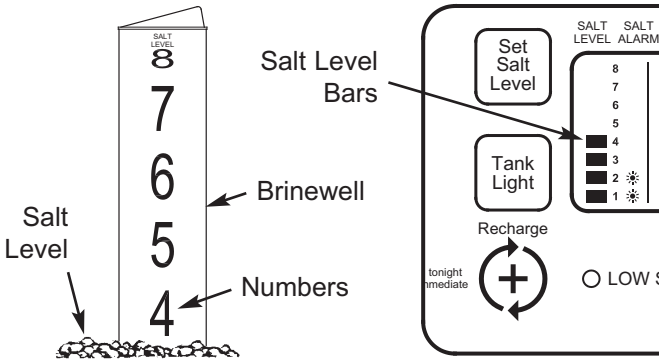

FIG. 24

3. Press the SET SALT LEVEL button as many times as necessary to make the salt level bars in the display (see Fig. 24) match the number on the brinewell. At level 2 or below, the “Low Salt" indicator will flash.
4. If you want to turn the salt monitor off, press the SET SALT LEVEL button past 8, until “OFF” shows in the display next to the number 8.

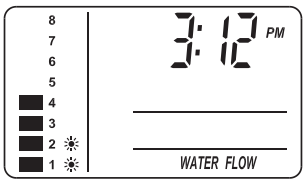

FIG. 25

Controller Features

OPTIONAL SETTINGS:

- **SALT EFFICIENCY**
- **CLEAN FEATURE**
- **CLEAN FEATURE MINUTES**
- **MAXIMUM DAYS BETWEEN REGENERATIONS**
- **97% FEATURE**
- **12 / 24 HOUR CLOCK**
- **BACKWASH & FAST RINSE TIMES**

1. To set any of these options, press and hold SELECT for 3 seconds until “000” shows in the display. Then press (do not hold) SELECT again to display one of the “Salt Efficiency” screens shown below.

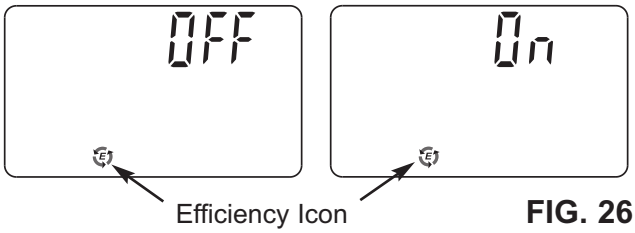

FIG. 26

SALT EFFICIENCY: When this feature is ON, the water softener will operate at salt efficiencies of 4000 grains of hardness per pound of salt or higher. The softener may recharge more often using smaller salt dosage and less water. This softener is shipped with the efficiency feature set OFF. Use the △ UP or ▽ DOWN buttons to change between OFF and ON. An efficiency icon will be displayed when this feature is ON.

California Efficiency Requirement

Your North Star Water Softener has a “High Efficiency” feature that can be set ON or OFF. This softener is shipped with the efficiency feature set OFF, which will utilize the maximum rated capacity while most often achieving maximum salt efficiencies. When installing this unit in the State of California, you MUST turn the efficiency feature ON. The softener may initiate more frequent recharges, but it will operate at 4000 grains per pound of salt or higher.

2. Press SELECT again to display one of the “Clean” screens shown below.

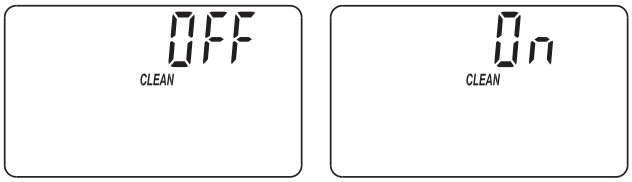

FIG. 27

CLEAN: This feature is beneficial on water supplies containing iron and/or high amounts of sediments (sand, silt, dirt, etc.). When set to ON, a backwash and fast rinse cycle will occur first, preceding the normal regeneration sequence. This provides extra cleaning of the resin bed before it is regenerated with the salt brine. To conserve water, if your water supply does not contain iron or sediments, be sure this feature is set to OFF. The default is OFF. Use the △ UP or ▽ DOWN buttons to change between OFF and ON.

3. Press SELECT again to display the “Clean Time” screen shown below.

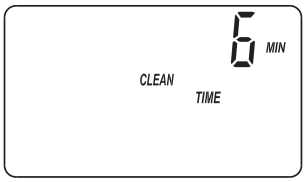

FIG. 28

CLEAN FEATURE MINUTES: If you have set the Clean Feature ON, the length of the extra backwash cycle automatically is set to a default value that depends on the model. However, you can adjust this time from 1 to 15 minutes in length. To change this cycle time, use the △ UP button to increase the time, or the ▽ DOWN button to shorten the time. If no change is desired, continue to next step.

continued on next page

Controller Features

4. Press SELECT again to display the “Recharge Days” screen.

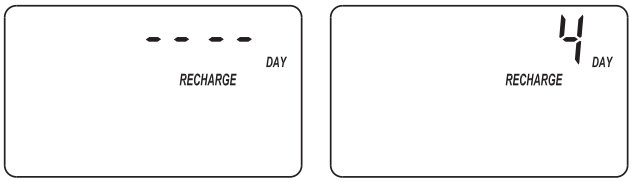

Default Display

Example:
Set to 4 days maximum between regenerations

FIG. 29

MAXIMUM DAYS BETWEEN REGENERATIONS: The electronic controller automatically determines regeneration frequency. This provides the greatest operating efficiency and, under most conditions this feature will be left in its default mode. However, you can set this feature to force a regeneration every set number of days. You may want to do this if, for example, your water supply contains iron and you want the softener to regenerate at least once every few days to keep the resin bed clean. Use the △ UP or ▽ DOWN buttons to change the number of days (up to 15).

5. Press SELECT again to display the “97%” screen.

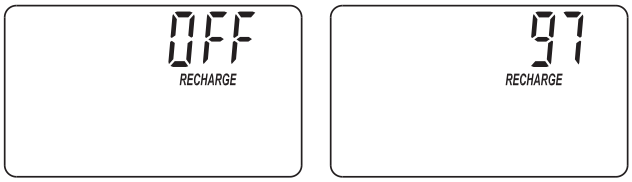

FIG. 30

97% FEATURE: The 97% Feature can save salt and water by regenerating when 97% of the softener’s capacity has been used up. With this feature ON, the regeneration can occur at any time (whenever the system has reached 97% of its capacity). The default is OFF. If this feature is desired, turn it on by pressing the △ UP button.

6. Press SELECT again to display the “12 or 24 hr” screen.

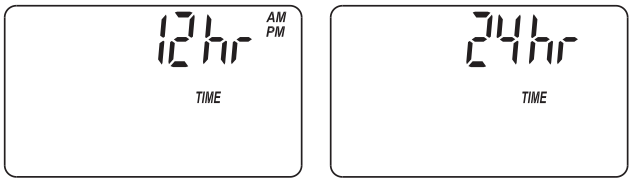

FIG. 31

12 OR 24 HOUR CLOCK: All time displays are shown in standard clock time (1 to 12 AM; and 1 to 12 PM) at the 12 hr default setting. If 24 hour time format is desired, set to 24 hr by pressing the △ UP button.

7. Press SELECT again to display the “Backwash Time” setting screen.

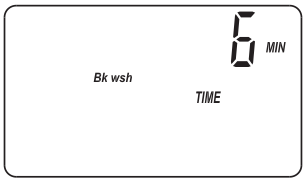

FIG. 32

BACKWASH & FAST RINSE TIMES: If you experience salty tasting water after regeneration, you may need to increase the backwash and fast rinse times. The default backwash and fast rinse times depend on the model. However, you may increase or decrease the backwash and fast rinse times, in 1 minute increments.

If you wish to change the backwash time, use the △ UP or ▽ DOWN buttons to set the backwash time between 1 and 30 minutes.* Then press SELECT to display the “Fast Rinse Time” setting screen.

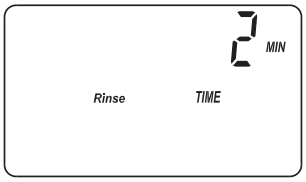

FIG. 33

If you wish to change the fast rinse time, use the △ UP or ▽ DOWN buttons to set the fast rinse time between 1 and 30 minutes.*

* Setting backwash and/or fast rinse times too low may result in salty tasting water after regeneration.

8. Press SELECT to return to the normal run (time of day) screen.

Controller Features

TANK LIGHT

To turn on the light inside the salt storage tank, press the TANK LIGHT button on the faceplate. Press this button again to turn the light off. It will also turn off automatically after 15 minutes.

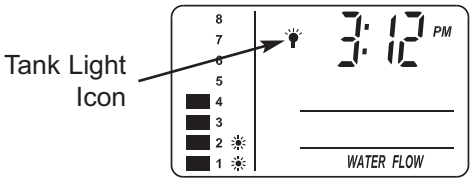

FIG. 34

WATER FLOW THROUGH THE SOFTENER

If soft water is in use, the water flow bars continually scroll across the display. The bars scroll slowly when water flow is slow, and move faster as water flow increases. The flow bars do not show when all faucets and water using appliances are off.

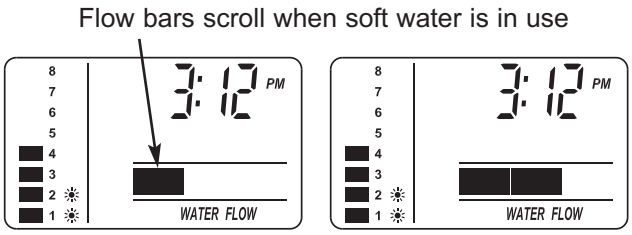

FIG. 35

RECHARGE TIME REMAINING & VALVE POSITION INDICATORS

One of the valve position indicators (Serv, Fill, Brine, Bkwsh, Rinse) is displayed while the softener is recharging. RECHARGE flashes in the display and, beginning with Brine, the minutes of recharge remaining before return to service appears in place of the present time. When the valve is moving from one cycle to another, both position indicators are flashing.

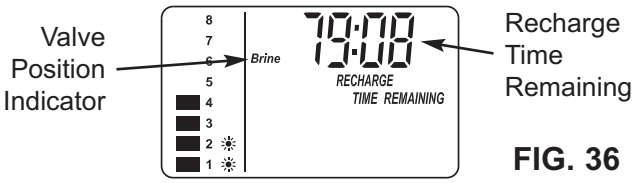

FIG. 36

POWER OUTAGE MEMORY

If electrical power to the softener is interrupted, the time display is blank but the electronic controller keeps the correct time for several hours. When power is restored, you must reset the present time only if the display is flashing. All other settings are maintained and never require resetting unless a change is desired. If the time is flashing after a long power outage, the softener continues to work as it should to provide you with soft water. However, regenerations may occur at the wrong time of day until you reset the clock to the correct time of day.

NOTE: If the water softener was regenerating when power was lost, it will now finish the cycle.

Routine Maintenance

ADDING SALT

Lift the salt lid and check the salt storage level frequently. If the water softener uses all the salts before you refill it, you will experience hard water. Until you have established a refilling routine, check the salt every two or three weeks. Always add if less than 1/4 full. Be sure the brinewell cover is on.

NOTE: In humid areas, it is best to keep the salt storage level lower, and to refill more often to avoid salt "bridging".

Recommended Salt: Nugget, pellet or coarse solar salts with less than 1% impurities.

Salt Not Recommended: Rock salt, high in impurities, block, granulated, table, ice melting, ice cream making salts, etc.

BREAKING A SALT BRIDGE

Sometimes, a hard crust or salt "bridge" forms in the brine tank. It is usually caused by high humidity or the wrong kind of salt. When the salt "bridges," an empty space forms between the water and the salt. Then, salt will not dissolve in the water to make brine. Without brine, the resin bed is not recharged and hard water will result.

If the storage tank is full of salt, it is difficult to tell if you have a salt bridge. A bridge may be underneath loose salt. Take a broom handle, or like tool, and hold it next to the water softener. Measure the distance from the floor to the rim of the water softener. Then, carefully push the broom handle straight down into the salt. If a hard object is felt before the pencil mark is even with the top, it is most likely a salt bridge. Carefully push into the bridge in several places to break it. Do not use any sharp or pointed objects as you may puncture the brine tank. Do not try to break the salt bridge by pounding on the outside of the salt tank. You may damage the tank.

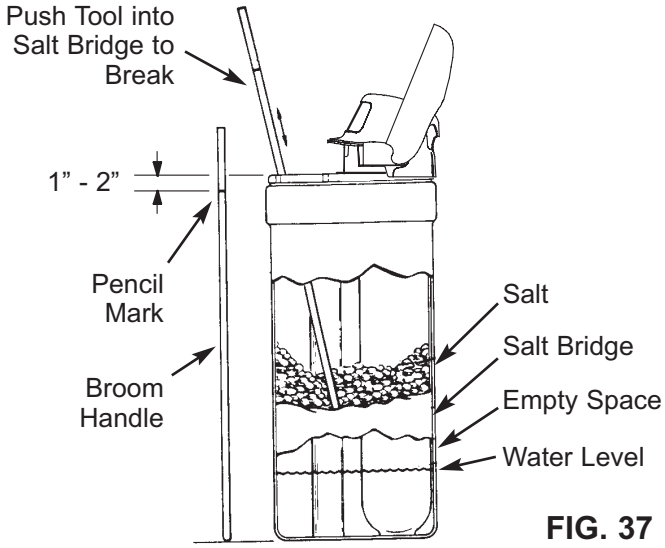

FIG. 37

Routine Maintenance

CLEANING THE NOZZLE & VENTURI

A clean nozzle & venturi (See Figure 38) is a necessity for the water softener to work properly. This small component creates the suction to move brine from the brine tank, into the resin tank. If it should become plugged with sand, silt, dirt, etc., the water softener will not work, and hard water will result.

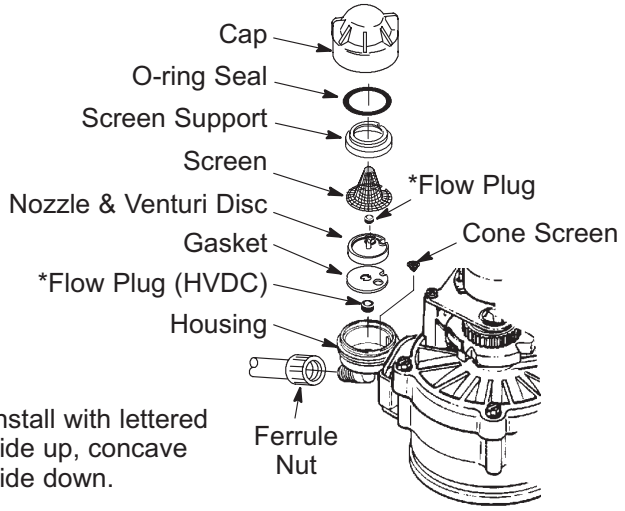

IMPORTANT: Be sure small hole in the gasket is centered directly over the small hole in the nozzle & venturi housing. Be sure the numbers are facing up.

FIG. 38

To get access to the nozzle & venturi, remove the water softener's top cover. Put the bypass valve(s) into the bypass position. Be sure the water softener is in soft water (service) cycle (no water pressure at nozzle & venturi). Then, holding the nozzle & venturi housing with one hand, unscrew the cap. Do not lose the o-ring seal. Lift out the screen support and screen. Then, remove the nozzle & venturi disc, gasket and flow plug(s). Wash the parts in warm, soapy water and rinse in fresh water. Be sure to clean both the top and bottom of the nozzle & venturi disc. If needed, use a small brush to remove iron or dirt. Do not scratch, misshape, etc., surfaces of the nozzle & venturi.

Carefully replace all parts in the correct order. Lubricate the o-ring seal with silicone grease and locate in place. Install and tighten the cap by hand, while supporting the housing. Overtightening may break the cap or housing. Put the bypass valve(s) into service (soft water) position.

Recharge the softener to reduce water level in the tank. This will also assure that the softener is completely recharged and ready to provide softened water again. Check the water level in the tank by looking down the brinewell. If the water level does not drop after a recharge, the problem has not been resolved. Contact us at: info@northstarwater.com

PROTECT THE WATER SOFTENER FROM FREEZING

If the softener is installed where it could freeze (summer cabin, lake home, etc.), you must drain all water from it to stop possible freeze damage. To drain the softener:

1. Close the shut-off valve on the house main water pipe, near the water meter or pressure tank.

2. Open a faucet in the soft water pipes to vent pressure in the softener.

3. Move the stem in the single bypass valve to bypass. Close the inlet and outlet valve in a 3 valve bypass system, and open the bypass valve. If you want water in the house pipes again, reopen the shut-off valve on the main water pipe.

4. Unplug the power supply at the wall outlet. Remove the softener's top cover, together with the salt lid. Take off both drain hoses if they will interfere with moving the softener into position over the drain.

5. Carefully remove the large holding clips at the softener inlet and outlet. Separate the softener from the plastic installation adaptors, or from the bypass valve.

6. Lay a piece of 2 inch thick board near the floor drain (See Figure 39).

7. Move the softener close to the drain. Slowly and gently, tip it over until the rim rests on the wood block with the inlet and outlet over the drain. Do not allow the softener's weight to rest on the inlet and outlet fittings or they may break.

8. Tip the bottom of the softener up a few inches and hold until all water has drained. Leave the softener laying like this until you are ready to use it. Plug the inlet and outlet with clean rags to keep dirt, bugs, etc. out.

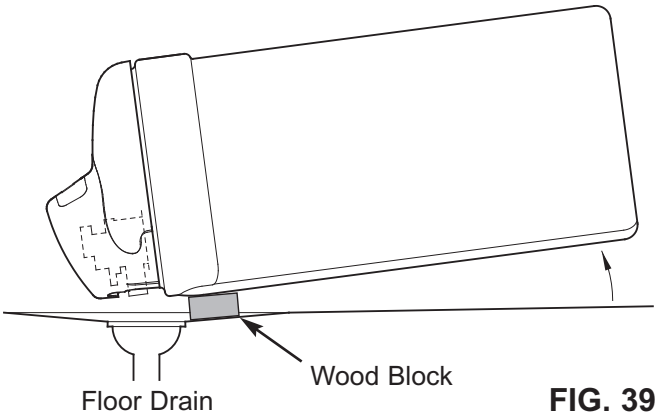

FIG. 39

Troubleshooting Guide

PROBLEM	CAUSE	CORRECTION
No soft water	1. No salt in the storage tank.	Refill with salt and then use RECHARGE NOW feature.
No soft water & display is blank	1. Power supply unplugged at wall outlet, or power cable disconnected from back of electronic board or power supply malfunction.	Check for loss of power and correct. Reset electronic controls and then use RECHARGE NOW feature.
	2. Fuse blown, circuit breaker popped, or circuit switched off (See "Power Outage Memory" on Page 17).	Replace fuse, reset circuit breaker, or switch circuit on, and then use RECHARGE NOW feature.
	3. Electronic control board malfunction.	Replace electronic control board (See Page 25).
No soft water & salt level not dropping	1. Salt storage tank "bridged".	Refer to "Breaking a Salt Bridge" section to break.
	2. Bypass valve(s) in "bypass" position.	Move bypass valve(s) to "service" position.
No soft water & salt storage tank full of water, water running to drain while unit is in the soft water cycle	1. Dirty, plugged or damaged nozzle & venturi assembly	Take apart, clean and inspect nozzle & venturi (See "Cleaning the Nozzle & Venturi" section.
	2. Inner valve fault causing leak.	Replace seals and rotor.
	3. Valve drain hose is plugged.	Hose must not have any kinks, sharp bends or any water flow blockage (See "Valve Drain Requirements" section.
	4. Valve drain line and Salt Storage Tank overflow drain connected together by a tee.	Disconnect tee and run separate drain lines.
	5. Low or high system water pressure (low pressure may disrupt brine draw during recharge, high pressure may cause inner valve parts failure).	If pressure is low, increase well pump output to a minimum 20 psi. If daytime pressure is over 100 psi, add a pressure reducing valve in the supply pipe to the softener. Contact a licensed plumber.
	6. Brine float dirty or broken.	Clean or replace Brine Valve Float Assembly.*
	7. Leak between valve and resin tank.	Replace o-rings between resin tank and valve.
Water hard sometimes	1. Incorrect time set.	Check and change time setting.
	2. Incorrect water hardness set.	Refer to "Set Water Hardness" section to set correctly.
	3. Incorrect model code programmed.	Refer to "Program the Water Softener" section to set correctly.
	4. Hot water being used when softener is regenerating.	Avoid using hot water while the softener is regenerating, as the water heater will fill with hard water.
	5. Possible increase in water hardness.	Test untreated water for hardness and iron, and program the water softener accordingly (See "Set Water Hardness") section to set.
	6. Leaking faucet or toilet valve. Excessive water usage.	A small leak can waste hundreds of gallons of water in a few days. Fix all leaks and always fully close faucets.
Iron in water	1. Clear water iron in water supply.	Test untreated water for hardness and iron, and program the water softener accordingly (See "Set Water Hardness") section to set.
	2. Iron in soft water.	Clean resin bed with Resin Bed Cleaner. Follow instructions on package.
	3. Bacterial or organic bound iron.	Cannot be treated by water softener.
Resin in household plumbing	1. Crack in distributor or riser tube.	Replace resin tank assembly.
Salt storage tank leaking	1. Crack in brine tank.	Replace salt storage tank assembly.
Motor stalled or clicking	1. Motor malfunction or internal valve fault causing high torque on motor.	a. Replace rotor/seal. b. Replace motor & switch.
Error code E1, E3 or E4 appears	1. Fault in wiring harness or connections to position switch.	Replace wiring harness or connections to position switch.
	2. Fault in switch.	Replace switch.
	3. Fault in valve causing high torque.	Replace rotor/seal.
	4. Motor inoperative.	Replace motor.
Error code E5	1. Electronic control malfunction.	Replace electronic control board.

Troubleshooting

MANUALLY INITIATED ELECTRONIC DIAGNOSTICS

1. To enter diagnostics, press the SELECT button and hold for three seconds. The display will change to show turbine count, valve cycle position, and position switch status (open or closed).

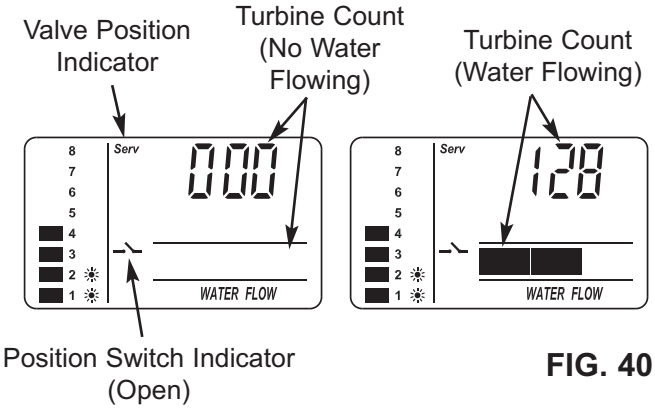

FIG. 40

TURBINE OPERATION: If no water is flowing through the softener, the turbine indicator displays three zeros. When water is flowing, a 000 to 199 count repeats for each gallon (3.8 liters) of water passing through the turbine. To check for positive operation of the turbine if zeros are shown, open a nearby soft water faucet and observe the turbine count. If you don't get a reading in the display with faucet open, pull the sensor housing from the valve outlet port (see Fig. 41). Pass a small magnet back and forth in front of the sensor. You should get a reading in the display. If you get a reading, unhook the inlet and outlet plumbing and check the turbine for binding.

POSITION SWITCH STATUS: With the valve in service, or any of the recharge cycle positions, the position switch indicator will show the switch open. While the valve is rotating from one position to another, the position switch indicator will show the switch closed. There is likely a problem if indications vary from this pattern.

OTHER INFORMATION: While in the diagnostics screen, the following information is available and may be beneficial for various reasons. This information is retained by the electronic controller from the first time electrical power is applied to the unit.

- Press and hold the △ UP button to display the number of days this controller has had electrical power applied.
- Press and hold the ▽ DOWN button to display the number of regenerations initiated by this controller since the model code number was entered.

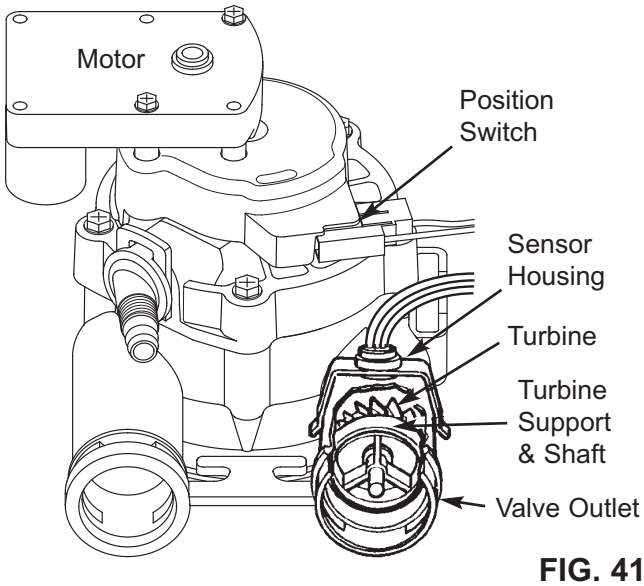

FIG. 41

NOTE: If the electronic controller is left in the diagnostic display (or a flashing display when setting times or hardness), the normal time of day display automatically returns if a button has not been pressed for 4 minutes. To return to the diagnostic display, repeat step 1, above.

RESETTING TO FACTORY DEFAULTS

To reset the electronic controller to its factory default for all settings (time, hardness, etc.):

1. Press the SELECT button and hold it until the display changes twice to show the flashing model code.

2. Press the △ UP button to display a flashing "SoS".

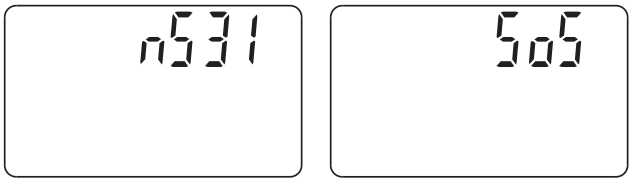

FIG. 42

3. Press the SELECT button, and the electronic controller will restart.

4. Set the present time, hardness, etc., as described on pages 12 & 13.

Troubleshooting

MANUAL ADVANCE REGENERATION CHECK

This check verifies proper operation of the valve motor, brine tank fill, brine draw, regeneration flow rates, and other controller functions. Always make the initial checks first, and perform the manually initiated electronic diagnostics.

NOTE: The display must show a steady time (not flashing). If an error code shows, first press the SELECT button to enter the diagnostic display.

1. Press the RECHARGE button and hold for 3 seconds. "RECHARGE", "Serv" and "Fill" begin to flash in the display as the softener enters the fill cycle of regeneration.

2. When valve reaches "Fill" position, remove the brinewell cover and, using a flashlight, observe fill water entering the tank.

3. If water does not enter the tank, look for an obstructed nozzle, venturi, fill flow plug, brine tubing, or brine valve riser pipe.

4. After observing fill, press the RECHARGE button to move the softener into brining. A slow flow of water to the drain will begin. Verify brine draw from the brine tank by shining a flashlight into the brinewell and observing a noticeable drop in the liquid level.

5. If the softener does not draw brine:

- nozzle and/or venturi dirty
- nozzle and venturi not seated properly on gasket
- restricted drain (check drain fitting and hose)
- ineffective nozzle and venturi seal
- other inner valve problem (rotor seal, rotor & disc, wave washer, etc.)

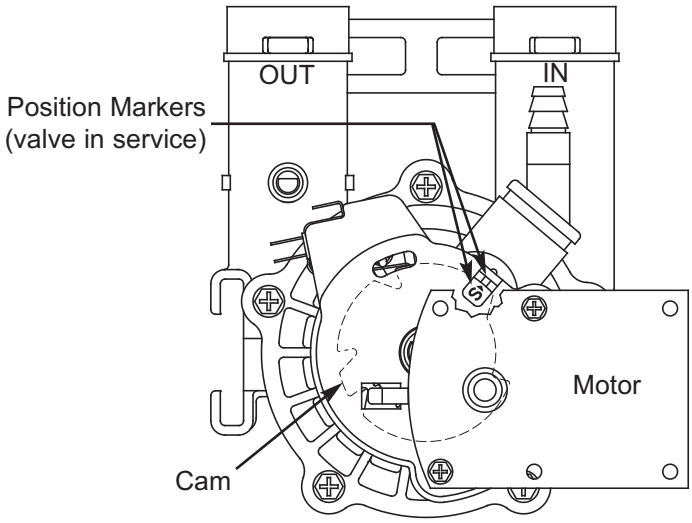

FIG. 43

NOTE: If water system pressure is low, an elevated drain hose may cause back pressure, stopping brine draw.

6. Again press RECHARGE to move the softener into backwash. Look for a fast flow of water from the drain hose.

7. An obstructed flow indicates a plugged top distributor, backwash flow plug or drain hose.

8. Press RECHARGE to move the softener into fast rinse. Again look for a fast drain flow. Allow the softener to rinse for a few minutes to flush out any brine that may remain in the resin tank from the brining cycle test.

9. To return the softener to service, press RECHARGE once more.

Wiring Schematic

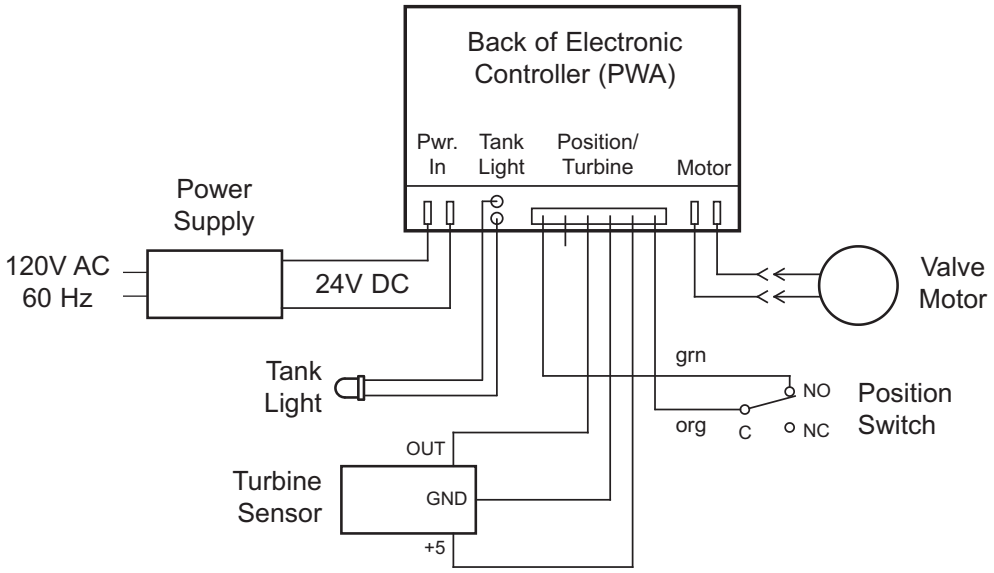

FIG. 44

Softener Exploded View

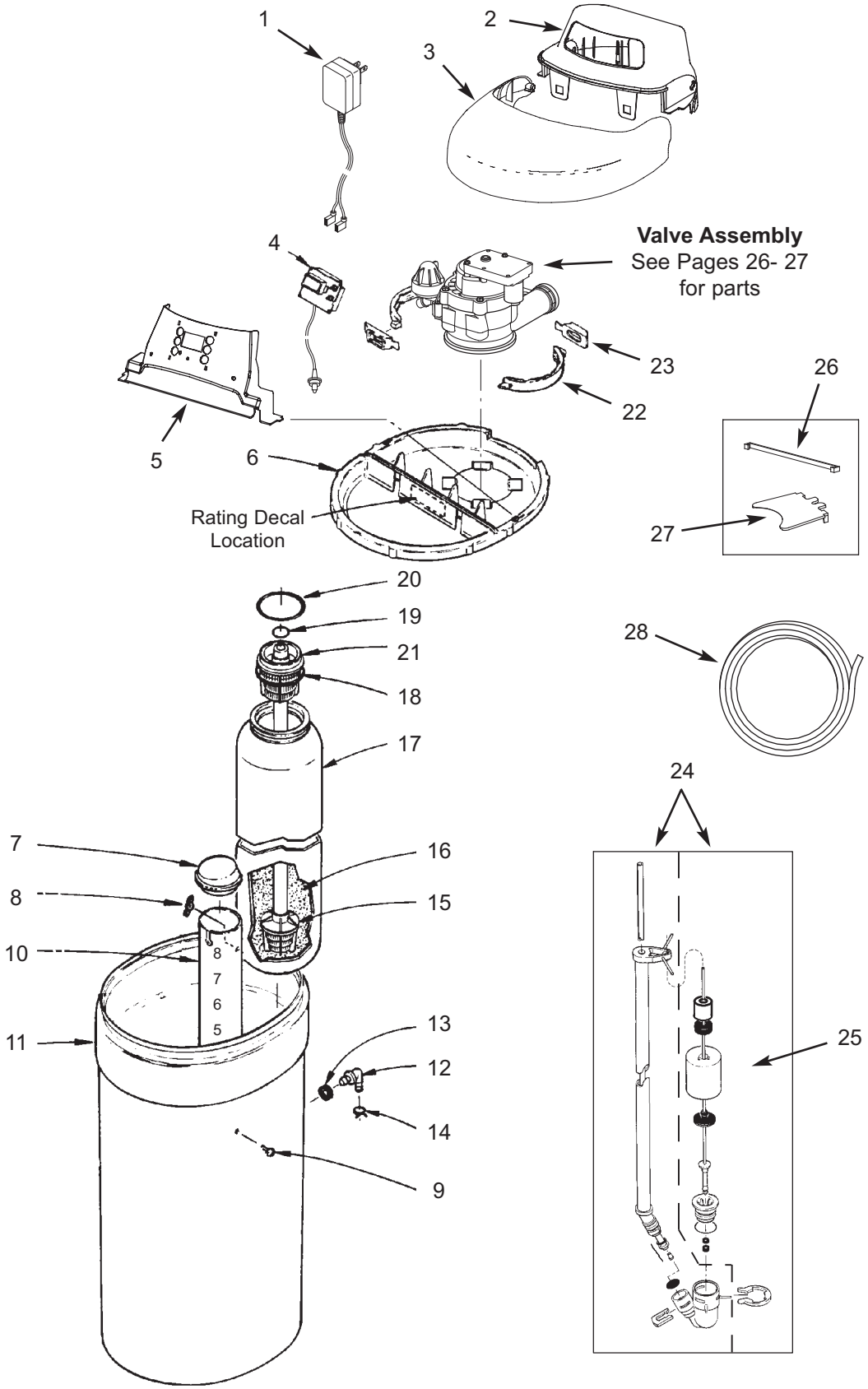

Softener Parts List

Key No.	Part No.	Description
1	7351054	Power Supply, 24V DC
2	7360825	Top Cover
3	7360833	Salt Lid (order decal below)
■	7371258	Instruction Decal
4	7360867	Repl. Electronic Control Board (PWA)
5	7360817	Faceplate (order decal below)
■	7371232	Faceplate Decal
6	7325388	Rim
7	7155115	Cover, Brinewell
–	7327576	Brinewell Mounting Hardware Kit (includes Key Nos. 8 & 9)
8	↑	Wing Nut, 1/4-20
9	↑	Screw, 1/4-20 x 5/8”
10	7214375	Brinewell Assembly (including salt level decal)
11	7341017	Repl. Brine Tank
–	7331258	Overflow Hose Adaptor Kit (includes Key Nos. 12-14)
12	↑	Adaptor Elbow
13	↑	Grommet
14	↑	Hose Clamp

Key No.	Part No.	Description
15	7327584	Repl. Bottom Distributor
16	0502272	Resin, 1 cu. ft.
17	7113058	Repl. Resin Tank, 8” x 40”
–	7112963	Distributor O-Ring Kit (includes Key Nos. 18-20)
18	↑	O-Ring, 2-3/4” x 3”
19	↑	O-Ring, 13/16” x 1-1/16”
20	↑	O-Ring, 2-7/8” x 3-1/4”
21	7077870	Top Distributor
–	7331177	Tank Neck Clamp Kit (includes 2 ea. of Key Nos. 22 & 23)
22	↑	Clamp Section (2 req.)
23	↑	Retainer Clip (2 req.)
24	7310202	Repl. Brine Valve Assembly
25	7327568	Float, Stem & Guide Assembly
26	–	Cover Lock (for shipping only)
27	–	Rim Insert (for shipping only)
28	7139999	Drain Hose
■	7371119	Owner’s Manual

■ Not illustrated.

To order repair parts, contact us at: info@northstarwater.com

Manufactured and warranted by
North Star Water Treatment Systems
1890 Woodlane Drive
Woodbury, MN 55125

Valve Exploded View

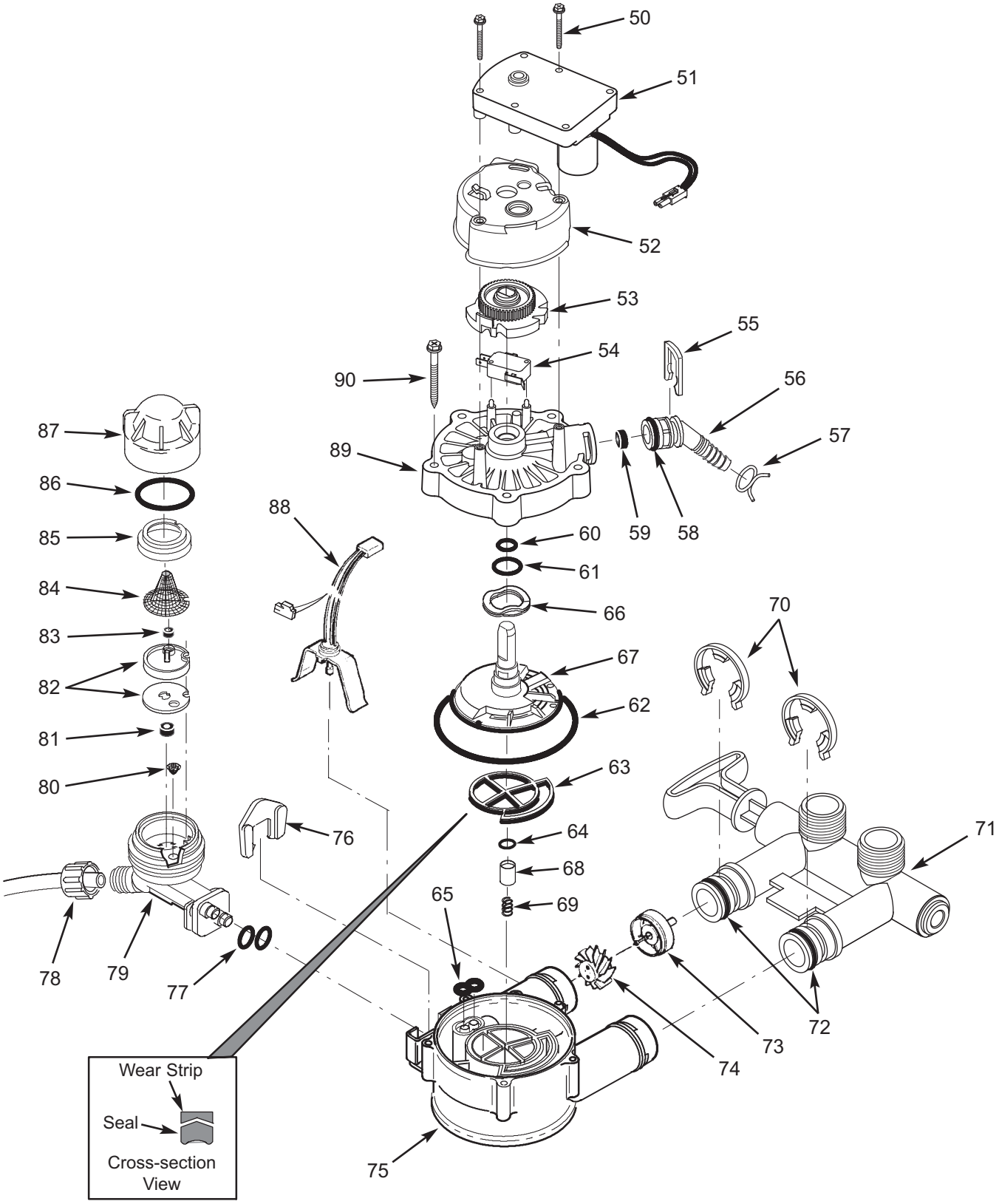

Valve Parts List

Key No.	Part No.	Description
50	7338111	Screw, #6-19 x 1-3/8” (2 req.)
51	7281291	Motor
52	7337474	Motor Mount
53	7284964	Cam & Gear
54	7030713	Switch
–	7331185	Drain Hose Adaptor Kit (includes Key Nos. 55-59)
55	↑	Clip, Drain
56	↑	Drain Hose Adaptor
57	↑	Hose Clamp
58	↑	O-Ring, 5/8” x 13/16”
59	↑	Flow Plug, 2.0 gpm
–	7129716	Seal Kit (includes Key Nos. 60-65)
60	↑	O-Ring, 7/16” x 5/8”
61	↑	O-Ring, 3/4” x 15/16”
62	↑	O-Ring, 3-3/8” x 3-5/8”
63	↑	Rotor Seal
64	↑	O-Ring, 3/8” x 9/16”
65	↑	Seal, Nozzle & Venturi
66	7082087	Wave Washer
67	7199232	Rotor & Disc
–	7342665	Drain Plug Kit, 3/4” (includes Key Nos. 64, 68 & 69)
68	↑	Plug, Drain Seal
69	↑	Spring
70	7116713	Clip, 3/4”, single (2 req.)
	7336397	Clip, 3/4”, pack of 20
71	7370286	Bypass Valve Assembly, 3/4”, including 2 O-Rings (See Key No. 72)

Key No.	Part No.	Description
72	7170288	O-Ring, 15/16” x 1-3/16”, single (2 req.)
	7336402	O-Ring, 15/16” x 1-3/16”, pack of 20
–	7113040	Turbine & Support Assembly, including 2 O-Rings (See Key No. 72) & 1 ea. of Key Nos. 73 & 74
73	↑	Turbine Support & Shaft
74	↑	Turbine
75	7082053	Valve Body
76	7081201	Retainer, Nozzle & Venturi
77	7342649	O-Ring, 1/4” x 3/8”, pack of 2
78	1202600	Nut - Ferrule
–	7238450	Nozzle & Venturi Assembly, (incl. Key Nos. 76, 77 & 79-87)
79	7081104	Housing, Nozzle & Venturi
80	7095030	Cone Screen
81	1148800	Flow Plug, 0.3 gpm
82	7187772	Nozzle & Venturi Gasket Kit
	7204362	Gasket Only, single
	7336486	Gasket Only, pack of 20
83	0521829	Flow Plug, 0.1 gpm
84	7146043	Screen
85	7167659	Screen Support
86	7170262	O-Ring, 1-1/8” x 1-3/8”, single
	7336436	O-Ring, 1-1/8” x 1-3/8”, pack of 20
87	7199729	Cap
88	7309803	Wire Harness, Sensor
89	7337466	Valve Cover
90	7342657	Screw, #10-14 x 2”, pack of 5

To order repair parts, contact us at: info@northstarwater.com

Manufactured and warranted by
North Star Water Treatment Systems
1890 Woodlane Drive
Woodbury, MN 55125